EDEN

Tall Basin Mixer

15 YEAR WARRANTY

Chrome | Matte Black | Brushed Brass | Gunmetal | Titanium Bronze | Brushed Nickel

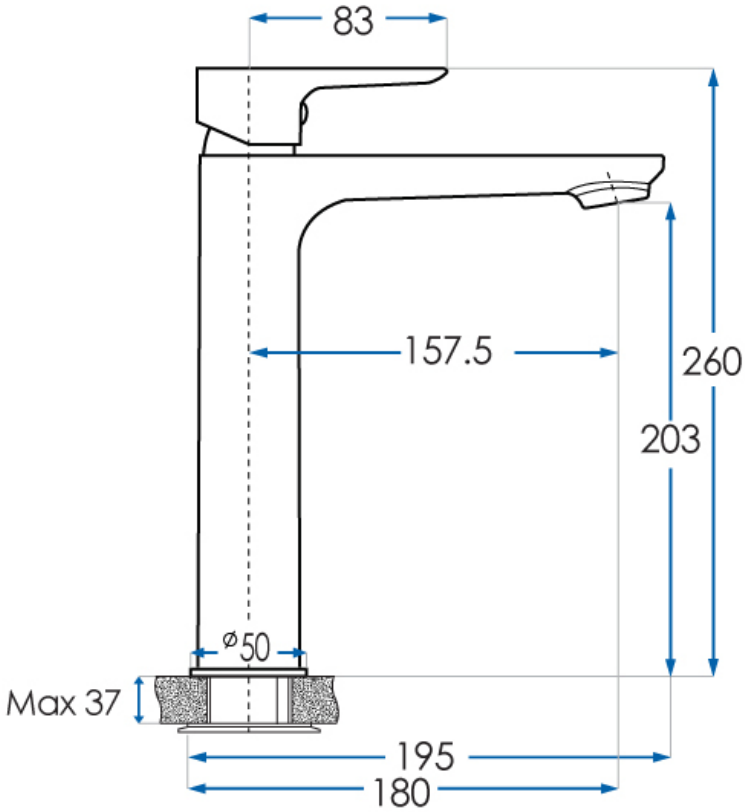

Lead Free
AS 3718
WM 30023
CASA LUSSO

The more stars the more water efficient
WATER RATING
www.waterrating.gov.au
6 litres per minute
In accordance with AS/NZS 6400
Licence No. 0422
Casa Lusso Pty Ltd.

CODE	FINISH
ED112-CH	Chrome
ED112-MB	Matte Black
ED112-BB	Brushed Brass
ED112-GM	Gunmetal
ED112-TB	Titanium Bronze
ED112-BN	Brushed Nickel

SPECIFICATIONS

Water Consumption	WELS 5 Star, 6 litres per minute
Material	Lead Free Brass Constuction
Includes	x1 Tap, x2 300mm flexi tails and fixing kit
Warranty	15 year ceramic cartridge replacement only
	7 year replacement product and parts
	1 year labour

CASA LUSSO

Due to our policy of continuous development, all designs and measurements are intended only as a guide and are subject to change without notice. Being hand made products they are subject to a size variance E&OE. This brochure is representative of the actual products at time of printing. Please confirm all particulars before purchase. Casa Lusso recommends having the product on site before commencing rough in.

Available at
hb Highgrove Bathrooms
www.highgrovebathrooms.com.au