EDEN In Wall Mixer Combination Kit - Installation Instructions

Product Codes - ED132-XX - *Suits WB132 - In Wall Body*

CONGRATULATIONS ON THE PURCHASE OF YOUR NEW CASA LUSSO TAPWARE. WE HOPE YOU AND YOUR FAMILY ENJOY YOUR NEW PRODUCT AND CONSIDER US FOR ANY FUTURE PROJECT. CASA LUSSO PRODUCTS HAVE BEEN MANUFACTURED UNDER THE HIGHEST STANDARDS OF QUALITY AND WORKMANSHIP.

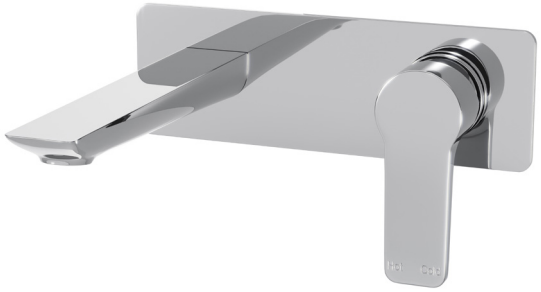

ED132-XX - In Wall Mixer Combination Kit

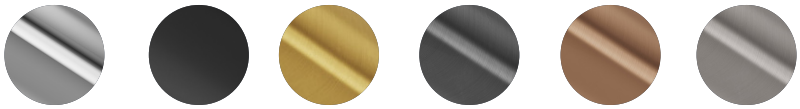

Chrome | Matte Black | Brushed Brass | Gunmetal | Titanium Bronze | Brushed Nickel

15 YEAR WARRANTY

Lead Free
AS 3718
WM 30023
CASA LUSSO

WARRANTY

GENERAL INFORMATION

MAINTENANCE

- Clean regularly using mild soap and dry with a soft cloth.
- Do not use abrasive cleaners, harsh detergents or citrus based cleaners on any products as these will scratch the surface.
- Tightening or adjustment of Tapware over time is considered general maintenance.
- Failure to clean/replace aerators/flow restrictors as required will void warranty.
- Damage to finishes that arise from installation or post installation will void warranty.

The warranty will not apply if:

- The product has been damaged by improper use;
- The product has not been used in accordance with any applicable instruction guide;
- The purchaser has attempted to modify or repair the product;
- The purchaser has failed to observe the cleaning and maintenance guidelines;
- The product is not installed by a licenced Plumber.
- Flow controllers/ aerators not regularly cleaned/ replaced.

Product warranties are personal to the person who acquires the product for their own consumption or use and not for resale or resupply. Claims with this product cannot be made by anyone other than the consumer. Where a product is covered by parts and labour warranty, the warranty covers both the repair of the defective part or the provision of a spare part to replace the defective part and the installation of that part.Where a product is covered by parts only, the warranty covers both the repair of the defective part or the provision of a spare part in replacement. It does not include the removal of the defective part or the installations of the repaired or replaced part. We reserve the right to provide minor components (e.g. handles, aerators, hoses, dress rings and washers) as 'Parts Only' to the customer. Casa Lusso reserves the right to alter/ amend this warranty offer in writing at any time.

FEATURES

Premium Warranty (Domestic Use):
15 year Ceramic cartridge replacement only
7 year Replacement products and parts[1]
1 year parts & labour[2]

Material: Lead Free Brass Construction

WELS 5 Star, 5 litres per minute

ALL INSTALLATIONS MUST COMPLY WITH AS/NZS3500

This product complies with the requirements of Lead-Free standards as defined in the National Construction Code Volume 3 and is suitable for use as part of Lead-Free Installation.

[1] Excludes Damage to ceramic disk cartridges from pieces of copper tube, plastic tube, sand, dirt or thread tube etc. All speciality finishes are subject to 2 year replacement product and parts and 1 year replacement product and parts & labour. [2] Jumper valves and ceramic disk spindles; 1 year parts only.

FAILURE TO COMPLY WITH ANY OF THE ABOVE INSTRUCTIONS WILL VOID ALL WARRANTIES

CASA LUSSO

EDEN In Wall Mixer Combination Kit - Installation Instructions

Product Codes - ED132-XX - *Suits WB132 - In Wall Body*

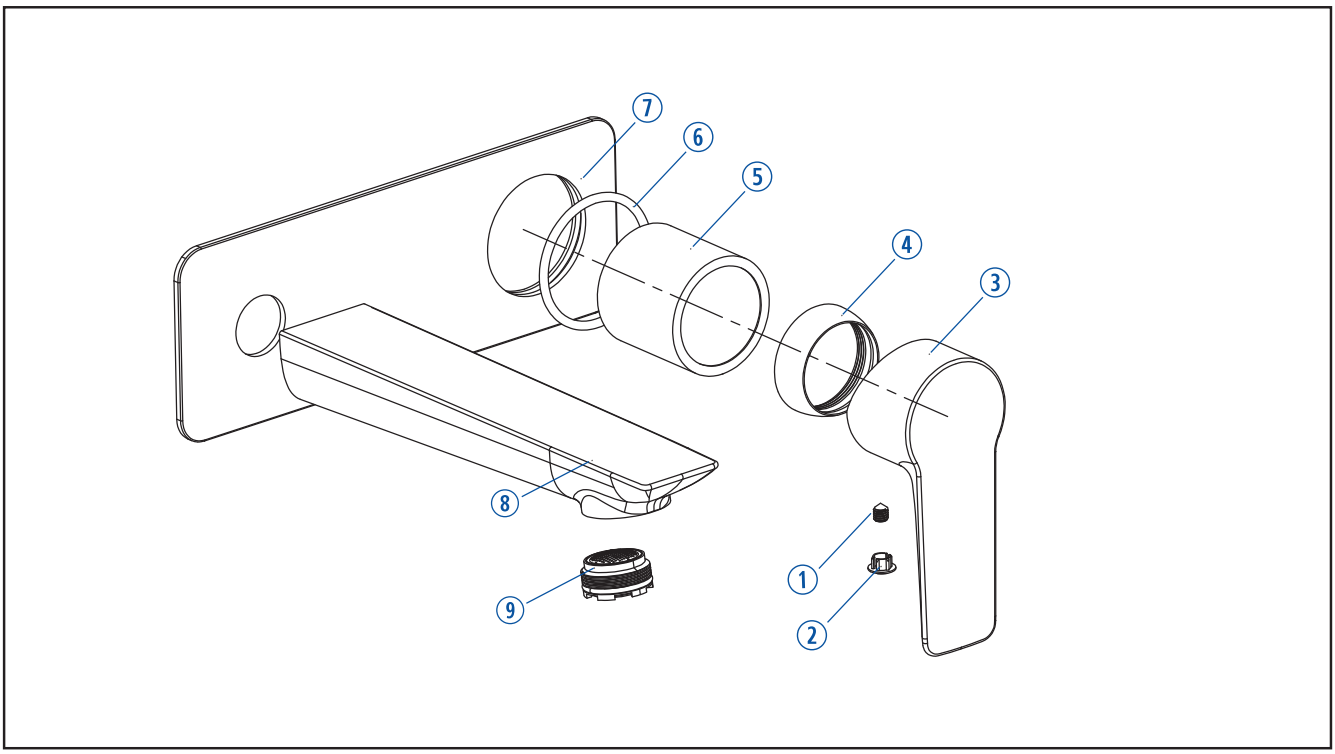

CONTENTS

1 Screw	6 O-ring
2 Button	7 Faceplate
3 Handle	8 Spout
4 Beautify Cover	9 Aerator
5 Copper Ring Jacket	

INSTALLATION

1. Install the faceplate onto the mixer body.

IT IS IMPORTANT TO FLUSH OUT THE WATER PIPES BEFORE INSTALLING THE MIXER.

2. Install the handle and diverter onto the mixer body and tighten with allen key.

FAILURE TO COMPLY WITH ANY OF THE ABOVE INSTRUCTIONS WILL VOID ALL WARRANTIES