SHOWER DOOR HINGE 90° DEGREE

Suitable for attachment for fixing panel to wall or panel to 90 degree corner

5 YEAR WARRANTY

Finish: Polished Chrome
Code: GFH90-CH

Finish: Matte Black
Code: GFH90-MB

Finish: Brushed Brass
Code: GFH90-BB

Finish: Brushed Nickel
Code: GFH90-BN

Finish: Gunmetal
Code: GFH90-GM

Finish: Champagne Gold
Code: GFH90-CG

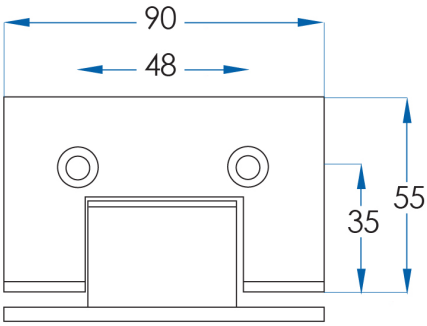

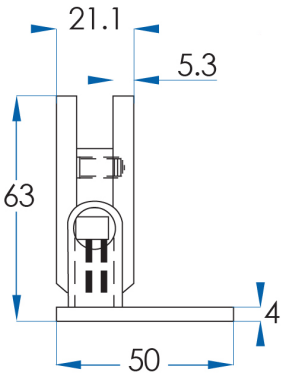

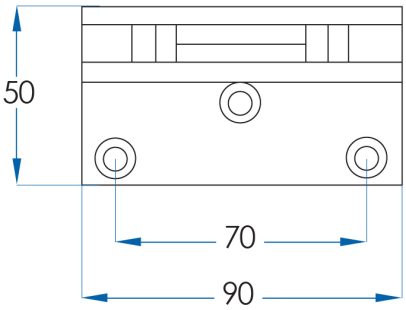

SPECIFICATIONS

Made to Australian standards code AS/NZS 2208:1996 Safety glazing materials in buildings. To Meet Australian Safety Standards and Warranty Purposes, Toughened Safety Glass **Must be Installed By a Licensed Glazier**. Due to the Nature of Tempered Safety Glass, Please Make Sure You Take Care with Transport and Handling of Your Products.

Material: Brass Construction
Max Door Weight capacity: 45kg (per Hinge pair)
Warranty: 5 yr replacement product
1 yr labour
Includes: Door Hinge Only

CASA LUSSO

Due to our policy of continuous development, all designs and measurements are intended only as a guide and are subject to change without notice. Being hand made products they are subject to a size variance E&OE. This brochure is representative of the actual products at time of printing. Please confirm all particulars before purchase. Casa Lusso recommends having the product on site before commencing rough in.

Available at

hb Highgrove Bathrooms

www.highgrovebathrooms.com.au