Casa Lusso

Round LED Mirror 800mm - Installation Instructions

CONGRATULATIONS ON THE PURCHASE OF YOUR NEW CASA LUSSO LED MIRROR, WE HOPE YOU AND YOUR FAMILY ENJOY YOUR NEW PRODUCT AND CONSIDER US FOR ANY FUTURE PROJECT. CASA LUSSO PRODUCTS HAVE BEEN MANUFACTURED UNDER THE HIGHEST STANDARDS OF QUALITY AND WORKMANSHIP.

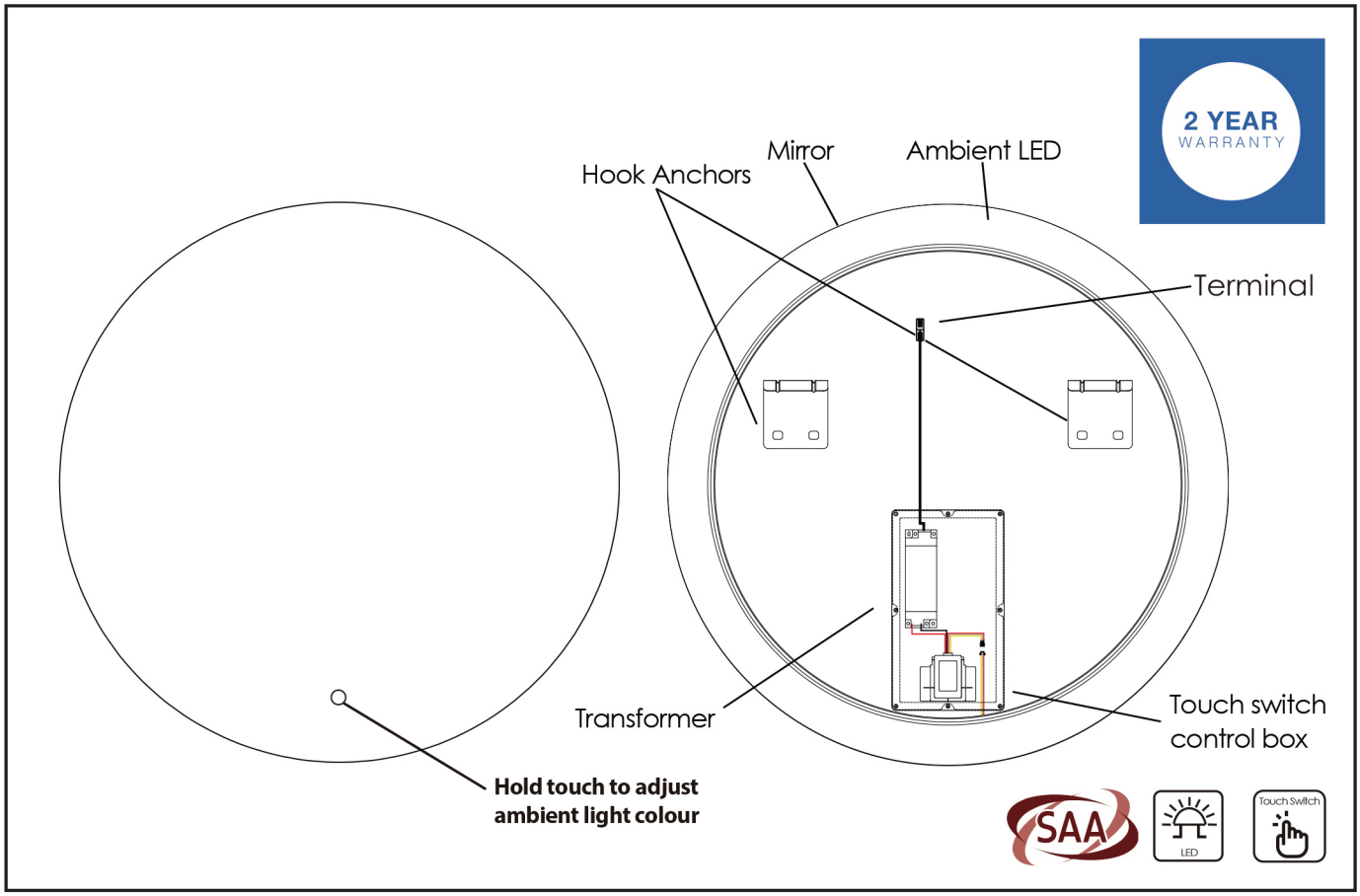

GENERAL INFORMATION

The warranty will not apply if:

- The product has been damaged by improper use;
- The product has not been used in accordance with any applicable instruction guide;
- The purchaser has attempted to modify or repair the product;
- The purchaser has failed to observe the cleaning and maintenance guidelines;
- The product is not installed by a licenced electrician.

Important:

- Mirrors are Extremely Fragile
  Take Care While Transporting and Handling Mirrored Goods.
- This product should be installed by a licenced electrician.
- Ensure mains power is off before installation.
- Do not install within 600mm of direct wet area contact.
  (ie. 600mm from bath or open shower)

To electrician: Please ensure a copy of the installation instructions is left with the end user for future reference.

FEATURES

Product Code: MVL800PR

Size: 800x800x28mm

Material: Copper-free Mirror With Led Lights

Installation: Wall Mount

Includes: LED Mirror, 4 Anchors,2 Brackets

Rating: IP44

Voltage: 220-240V

Power: 15W

CCT: 2700-6500K

Premium Warranty (Domestic Use) :
2 year replacement only
1 year labour

FAILURE TO COMPLY WITH ANY OF THE ABOVE INSTRUCTIONS WILL VOID ALL WARRANTIES

Round LED Mirror 800mm - Installation Instructions

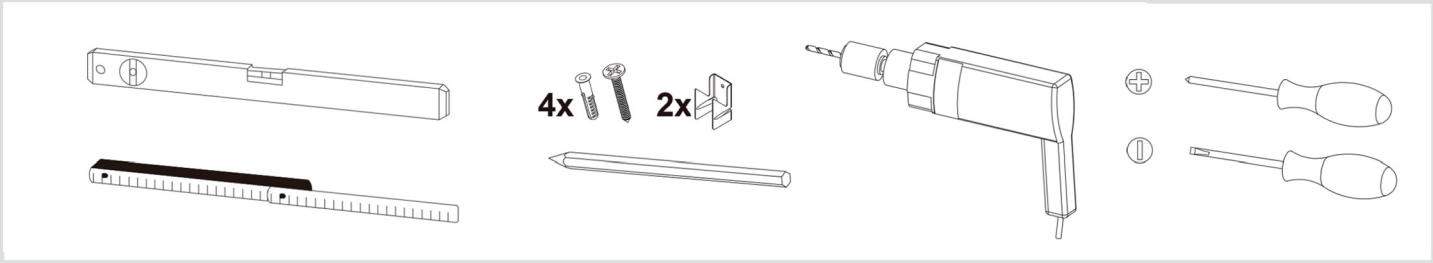

1

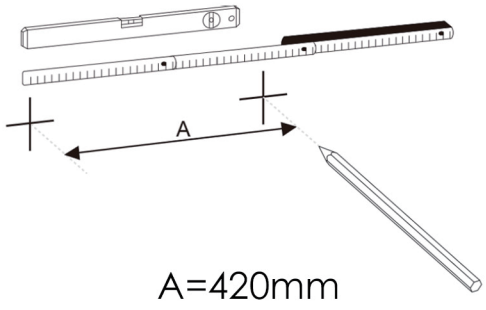

2

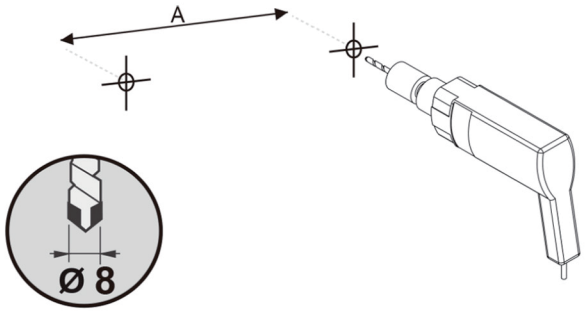

3

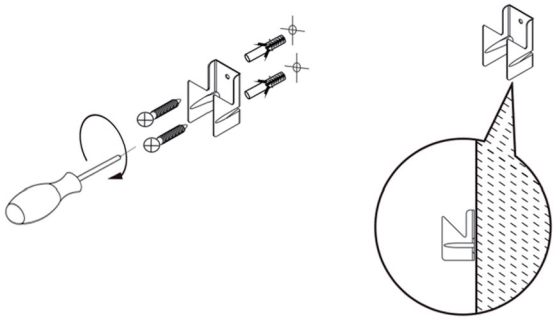

4

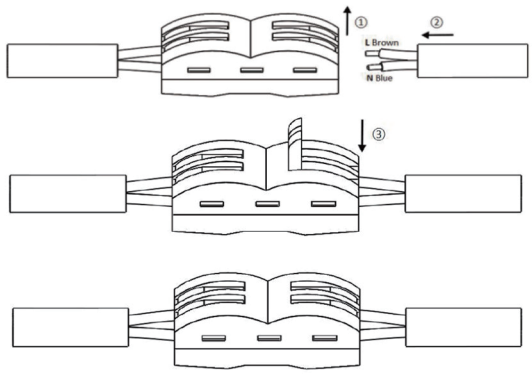

5

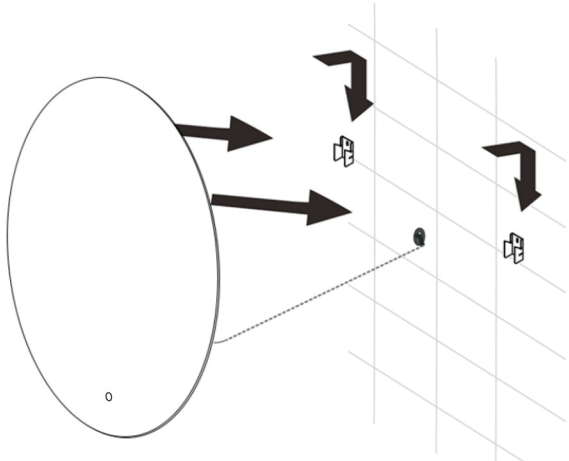

LIGHT SEQUENCE

- Short touch on the switch to turn ON the LED (memory will use the last setting it was on).
- Hold down the switch to change the colour temp. Colour temperature changes from warm white to cool white. Hold down to change from cool white back again.
- A short touch thereafter will adjust the brightness.
  Each press from low brightness, medium to high brightness.
- The way to turn off is also short touch, but it will need to be more than 5 seconds without touching the button - so wait 5 seconds.