SPIN

Swivel Hob Spout

7 YEAR WARRANTY

Chrome | Matte Black | Brushed Nickel | Brushed Brass | Gunmetal

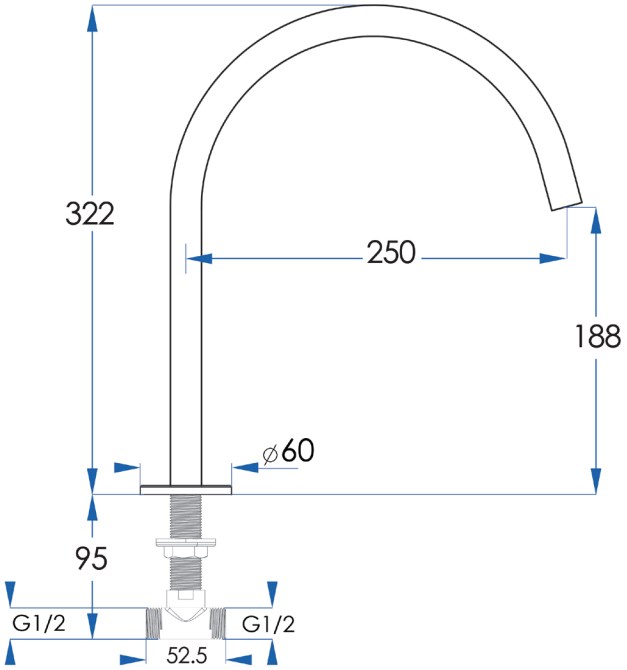

AS 3718
WM 30023
CASA LUSSO

The more stars the more water efficient
WATER RATING
www.waterrating.gov.au
4.5 litres per minute
In accordance with AS/NZS 6400
Licence No. 0422
Casa Lusso Pty Ltd.

CODE	FINISH
SP125-CH	Chrome
SP125-MB	Matte Black
SP125-BN	Brushed Nickel
SP125-BB	Brushed Brass
SP125-GM	Gunmetal

SPECIFICATIONS

Water Consumption	WELS 6 Star, 4.5 litres per minute
Material	Solid Brass Constuction
Includes	Spout Only
Warranty	7 year replacement product and parts 1 year labour

CASA LUSSO

Due to our policy of continuous development, all designs and measurements are intended only as a guide and are subject to change without notice. Being hand made products they are subject to a size variance E&OE. This brochure is representative of the actual products at time of printing. Please confirm all particulars before purchase. Casa Lusso recommends having the product on site before commencing rough in.

Available at

hb Highgrove Bathrooms

www.highgrovebathrooms.com.au

MESH

Progressive Hob Mixer Set (Suits HB186 Hob Body)

15 YEAR WARRANTY

Chrome

Matte Black

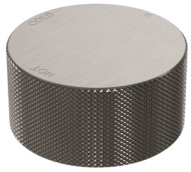

Brushed Nickel

Brushed Brass

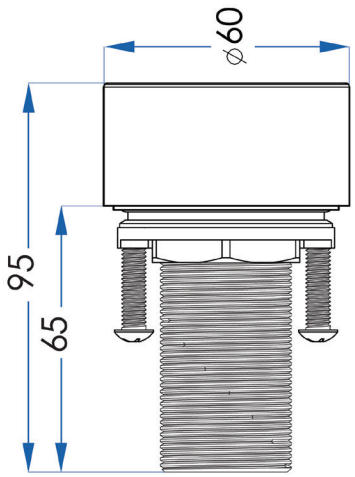

AS 3718
WM 30023
CASA LUSSO

CODE	FINISH
SPM186-CH	Chrome
SPM186-MB	Matte Black
SPM186-BN	Brushed Nickel
SPM186-BB	Brushed Brass

SPECIFICATIONS

Material	Solid Brass Constuction
Includes	x1 Progressive Hob Mixer (Hot & Cold) & Wall Body
Warranty	15 year ceramic cartridge replacement only
	7 year replacement product and parts
	1 year labour

CASA LUSSO

Due to our policy of continuous development, all designs and measurements are intended only as a guide and are subject to change without notice. Being hand made products they are subject to a size variance E&OE. This brochure is representative of the actual products at time of printing. Please confirm all particulars before purchase. Casa Lusso recommends having the product on site before commencing rough in.

Available at

hb Highgrove Bathrooms

www.highgrovebathrooms.com.au